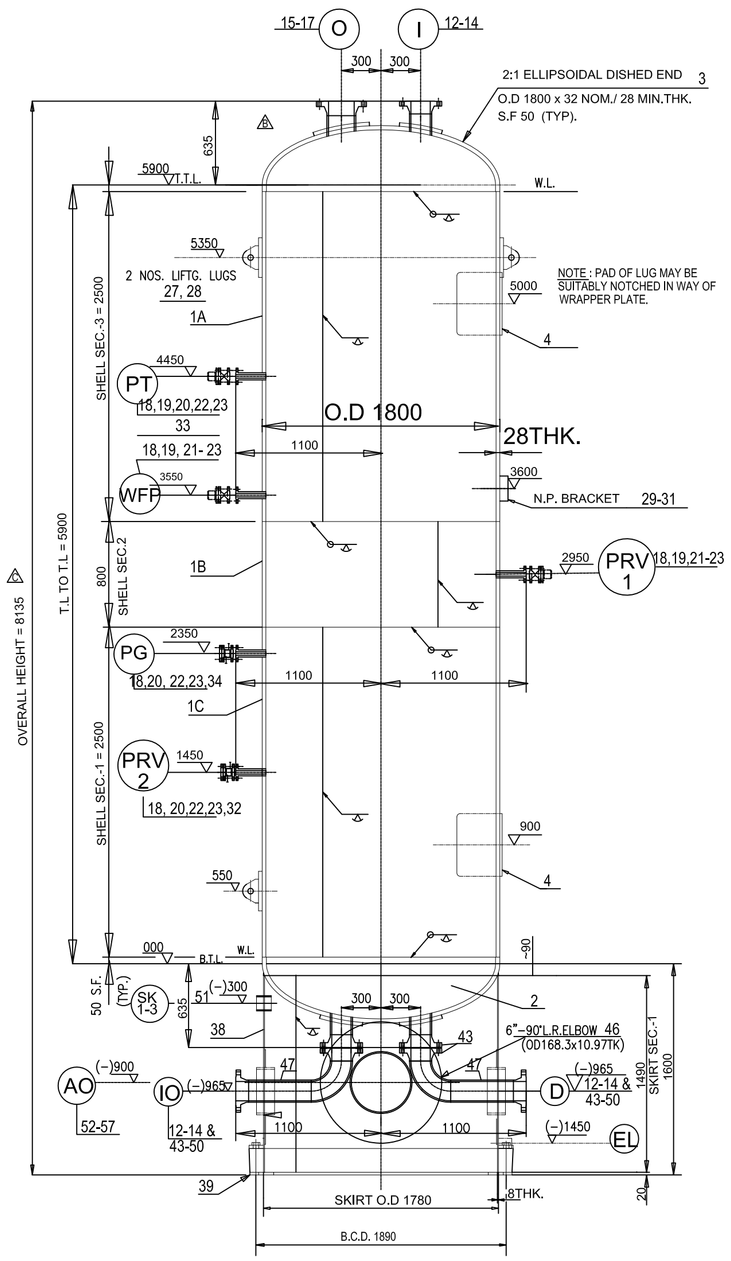


ELEVATION

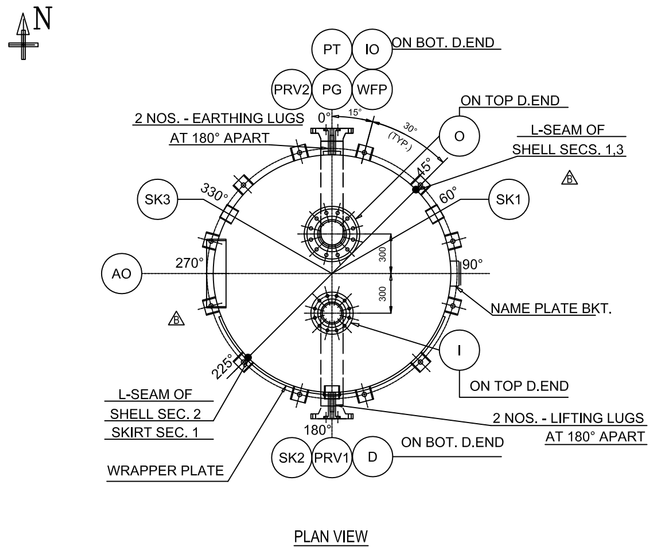


PLAN VIEW

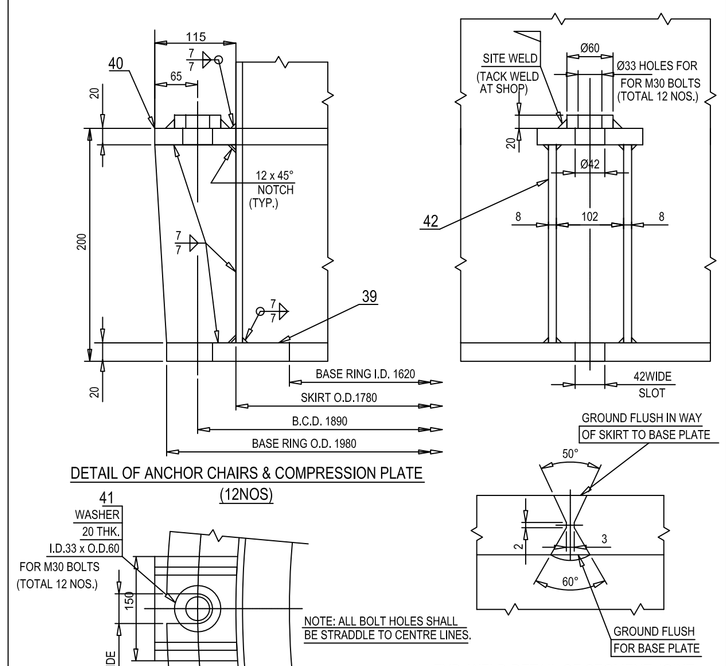


DETAIL OF ANCHOR CHAIRS & COMPRESSION PLATE (12NOS)

TYP. WELD DETAIL OF SEGMENT JOINT FOR BASE RING(AT 0°, 90°, 180° & 270°)

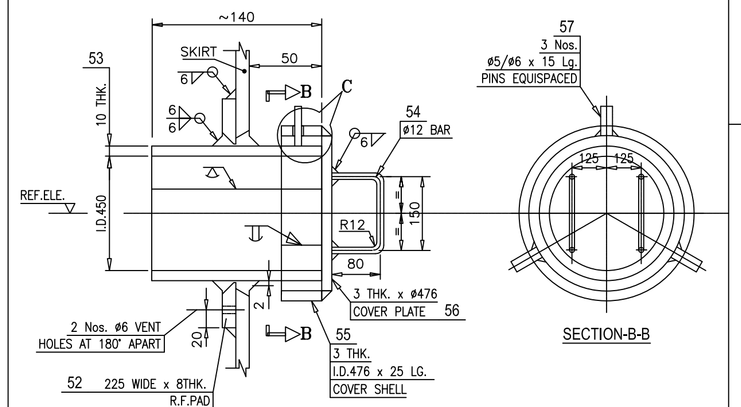


DETAIL OF ACCESS OPENING-AO




SECTION-B-B

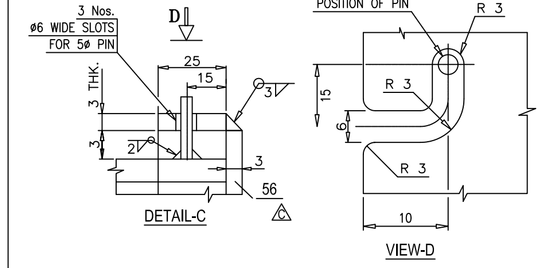


DETAIL-C

VIEW-D

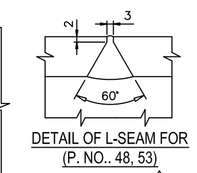

DETAIL OF L-SEAM FOR (P. NO.. 48, 53)

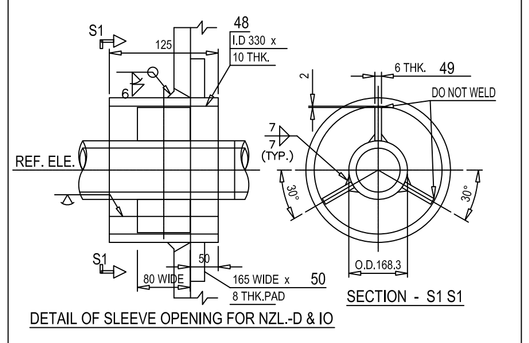


DETAIL OF SLEEVE OPENING FOR NZL.-D & IO

SECTION - S1 S1

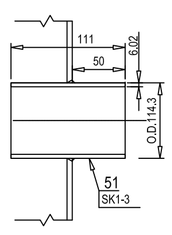

DETAIL OF SKIRT VENTS

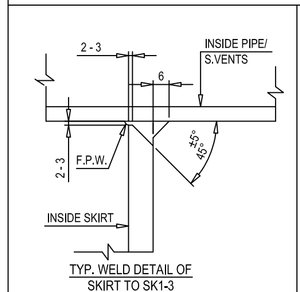


TYP. WELD DETAIL OF SKIRT TO SK1-3

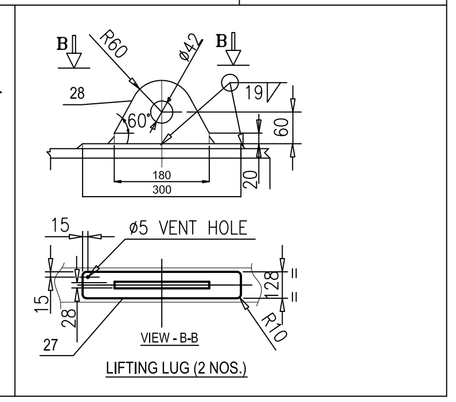


LIFTING LUG (2 NOS.)

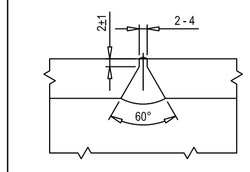

L.S & C.S WELD DETAIL FOR SHELL AND L.S. OF SKIRT SECTION

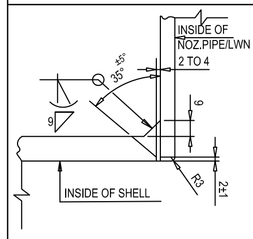


WELD DETAIL FOR NOZZLE(LWN) TO SHELL

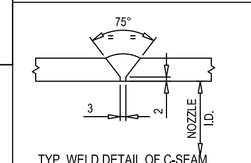

TYP. WELD DETAIL OF C-SEAM BET. PIPE TO PIPE/ ELBOW

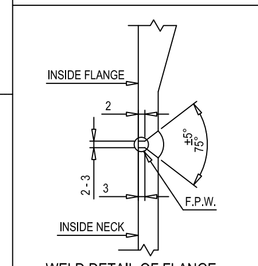


WELD DETAIL OF FLANGE TO NOZZLE

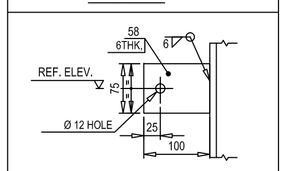


DETAIL OF EARTHING LUG (2NOS)

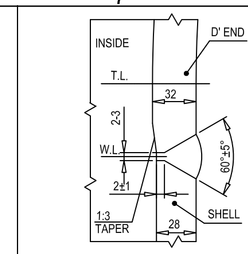


C.S.WELD DETAIL OF SHELL TO D'ENDS

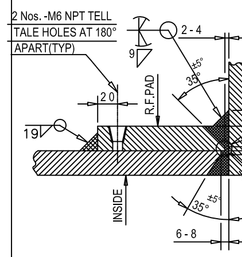


WELD DETAIL FOR NOZZLE TO D'END WITH R.F PAD (N1,N2,I1&I2)

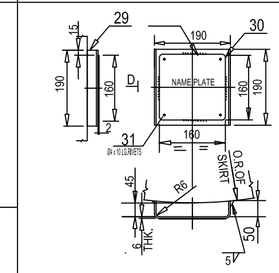


DETAIL OF NAME PLATE BRACKET

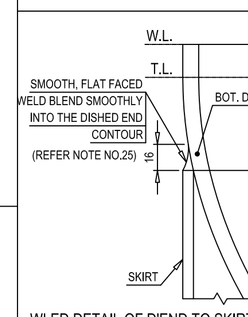


WLED DETAIL OF D'END TO SKIRT JOINT

(NOTE: REFER NOTE NO.25)

## NOTES:-

1. ALL DIMENSIONS ARE IN mm UNLESS OTHERWISE SPECIFIED.
2. ALL FLANGE BOLT HOLES TO STRADDLE WITH VESSEL CENTER LINES.
3. WELDING OF ALL PRESSURE PARTS SHALL BE FULL PENETRATION.
4. THE INDICATED THICKNESSES ARE THE MINIMUM ACCEPTABLE AFTER CONSTRUCTION.
5. PROTECT ALL MACHINED SURFACES AND THREADED CONNECTIONS WITH RUST PREVENTIVE IMMEDIATELY AFTER MACHINING.
6. I.D. OF WELD NECK FLANGE SHALL MATCH WITH CORRESPONDING I.D. OF NOZZLE PIPE.
7. PRESSURE RELIEF DEVICE TO BE INSTALLED ON ISOLATION VALVE BY THE USER AS PER UG–125.
8. a) FOR NOZZLES ON SHELL, PROJECTIONS ARE REFERRED FROM VESSEL CENTER LINE TO FLANGE CONTACT FACE.
   b) FOR NOZZLES ON D'ENDS, PROJECTIONS ARE REFERRED FROM T.L TO FLANGE CONTACT FACE.
9. HYDROSTATIC TEST SHALL BE CONDUCTED IN PRESENCE OF INSPECTING AUTHORITY.
10. ALL SHARP CORNERS ARE TO BE ROUNDED OFF TO MIN. 3mm RADIUS.
11. FLANGE DIMENSIONS SHALL BE AS PER ASME B16.5.
12. –––––––
13. –––––––––
14. ALL MATERIALS SHALL CONFIRM TO ASME SEC.II PART–A, ED 2010 ADD 2011.
15. PIPE TO FLANGE JOINT SHALL BE 100% RADIOGRAPHED.
16. DISSMILAR THICKNESS SHALL BE ALIGNED WITH MINIMUM 1:3 TAPER.
17. MATERIAL TO BE PURCHASED AS PER APPLICABLE T.D.C.
18. SURFACE FINISH FOR FLANGES GASKET FACE SHALL BE 3.2 TO 6.3 um.
19. ALL NOZZLE R.F. PADS WELDS SHALL BE PNEUMATICALLY TESTED WITH AIR AT 100 kpa(g) BY USING SOAP SOLUTION.
20. –––––––––
21. ––––––––––
22. PLATE MATERIAL USED FOR PRESSURE PARTS SHALL BE IN NORMALISED CONDITION.
23. FORGINGS SHALL BE IN NORMALISED CONDITION.
24. ––––––––––
25. BEFORE WELDING THE PLATFORMS & OTHER PARTS DIRECTLY TO BE WELDED TO VESSEL AND SKIRT TO BOTTOM DISHED, THE SURFACE TO BE PREHEATED TO 150°C AND WELDED.
26. SADDLE SUPPORTS SHALL BE CUT LEAVING WEAR PLATES IN PLACE.
27. BILL OF MATERIALS OF PART NOS.38 TO 57 SHOWN ONLY FOR ADDITIONAL SKIRT AND NOZZLE.

## DESIGN DATA

| | | |
|---|---|---|
| DESIGN CODE | | ASME SEC.VIII DIV.1–ED 2010 ADD 2011 |
| ASME CODE STAMP | | NOT APPLICABLE |
| MANUFACTURER'S SERIAL NO. | | 002 & 003 |
| INSPECTION BY | | TPI |
| PRESSURE: INT. DESIGN | bar(g) | 40 |
| PRESSURE: OPERATING (INT/EXT.) | bar(g) | 40 (MAX.)/NIL |
| PRESSURE: HYDROSTATIC TEST | bar(g) | 52(53Kg/Cm2g) AT 45°C MAX. |
| PRESSURE: M A W P | bar(g) | 40 AT 70°C |
| TEMPERATURE: DESIGN | °C | 70 |
| TEMPERATURE: OPERATING | °C | 45 |
| TEMPERATURE: HYDROSTATIC TEST | °C | 45 MAX. |
| TEMPERATURE: MDMT | °C | 5 |
| FLUID HANDLED | | AIR |
| CORROSION ALLOWNCE | mm | 1.5 |
| CAPACITY | ($m^3$) | 15.4 (WATER CAPACITY) |
| RADIOGRAPHIC EXAMINATION | | FULL – RT1 |
| JOINT EFFICIENCY | | 1 |
| POST WELD HEAT TREATMENT | | NO(SEE NOTE – 25 ) |
| IMPACT TESTING | | ––NIL–– |
| LETHAL SERVICE AS PER UW–2 | | NO |
| ADDITIONAL LOAD ON NOZZLES | | NOT APPLICABLE |
| REF. TO UG–22 LOADING | | ––––– |
| INSULATION THICKNESS | mm | NIL |
| LOCATION | | CHENNAI |
| QTY. | | TWO |
| NATIONAL BOARD REGISTRATION | | NO |
| EMPTY WEIGHT | Kgs. | 11120 |
| OPERATING WEIGHT | Kgs. | 12120 |
| HYDROTEST WEIGHT | Kgs. | 26520 |

## LIST OF APPLICABLE CODES/STANDARD/SPECIFICATIONS

| SR.NO. | DESCRIPTION |
|---|---|
| 7 | ASME B16.20 – ED 2007 |
| 6 | ASME B36.10M – ED 2004 |
| 5 | ASME B16.5 – ED 2009 |
| 4 | ASME SEC.IX ED 2010 ADD. 2011 |
| 3 | ASME SEC.II PART A ED 2010 ADD 2011 |
| 2 | ASME SEC.II PART C & D(M) ED 2010 ADD 2011 |
| 1 | ASME SEC.VIII DIV.1–ED 2010 ADD 2011 |

## PAINTING

| VESSEL PART | SURFACE FINISHING | PAINTING |
|---|---|---|
| ALL EXTERNAL UNMACHINED SURFACE | SA 2–1/2 | TWO COATS RED OXIDE PRIMER |
| MACHINED SURFACE | ––– | RUST PREVENTIVE OIL |

ADDED PART NOS.

| ITEM No. | DESCRIPTION | QTY. | SIZE | TDC NO. | | UNIT WT. | TOTAL WT. IN Kgs. | REMARKS |
|---|---|---|---|---|---|---|---|---|
| 58 | EARTHING LUG (EL) | 2 | 6THK.x 75 x 100 | SREE/TDC/STRUCTURAL/S/001 | IS 2062 E 250 GR.B | 0.35 | 0.7 | |
| 57 | COVER PINS-AO | 3 | Ø 5/Ø6 x 15 LG. | SREE/TDC/STRUCTURAL/S/001 | IS 2062 E 250 GR.B | -- | -- | |
| 56 | COVER PLATE-AO | 4 | Ø 476 x 3THK. | SREE/TDC/STRUCTURAL/S/001 | IS 2062 E 250 GR.B | 4.2 | 4.2 | |
| 55 | COVER PLATE-AO (DEV.LG=1505) | 1 | I.D 476 x 3THK, x25LG | SREE/TDC/STRUCTURAL/S/001 | IS 2062 E 250 GR.B | 0.9 | 0.9 | |
| 54 | HANDLE-AO | 1 | Ø 12 bar X 295 LG. | SREE/TDC/STRUCTURAL/S/001 | IS 2062 GR.B | 0.26 | 0.26 | |
| 53 | ACCESS OPENING-AO ( DEV.SIZE=1445) | 1 | I.D 450 x 10THK x 140 LG. | SREE/TDC/STRUCTURAL/S/001 | IS 2062 E 250 GR.B | 15.9 | 15.9 | |
| 52 | PAD FOR ACCESS OPENING-AO | 1 | O.D 930 / I.D 470 x 8THK. | SREE/TDC/STRUCTURAL/S/001 | IS 2062 E 250 GR.B | 31.6 | 31.6 | |
| 51 | SKIRT VENTS - SK 1-3 | 3 | O.D 114.3 x 6.02THK.x 111 LG. | SREE/TDC/PIPES/001 | SA 106 GR.B/ IS 1239 GR.B | 1.78 | 5.34 | |
| 50 | PAD FOR SLEEVE PIPE-D&IO | 2 | O.D 678/I.D350 x 8THK. | SREE/TDC/STRUCTURAL/S/001 | IS 2062 E 250 GR.B | 16.6 | 33.2 | |
| 49 | STIFFENERS FOR D&IO | 6 | 6 THK. x 80x 61 | SREE/TDC/PLATES/001 | SA 516 GR.70 | 0.23 | 1.38 | |
| 48 | SLEEVE PIPE FOR -D&IO(DEV.1068) | 2 | I.D 330 x 10THK. x 125 LG. | SREE/TDC/STRUCTURAL/S/001 | IS 2062 E 250 GR.B | 10.5 | 21.0 | |
| 47 | PIPE FOR NOZ.D&IO(HORIZONTAL) | 2 | O.D 168.3x10.97THK.x 475LG. | SREE/TDC/PPES/001 | SA 106 GR.B | 20.2 | 40.4 | |
| 46 | 90° L.R.ELBOW-D&IO | 2 | O.D 168.3x10.97THK. | SREE/TDC/FITTINGS/001 | SA 234 GR.WPB | 15.6 | 15.6 | |
| 45 | STUD/2NUTS FOR NOZL.-D&IO | 24 SETS | 3/4" x 130 LG. | SREE/TDC/FASTENERS/001 | SA 193 GR.B7/ SA 194 GR.2H | 0.44 | 10.56 | |
| 44 | GASKET FOR NOZL.D & IO | 2 | SPIRAL WOUND 150NB,300#.-4THK. | SREE/TDC/GASKETS/001 | SS 304 WITH GRAPHITE FILLED | ----- | ----- | |
| 43 | COMP.&W.N FLG.FOR NZL.-D&IO | 4 | 150NB,WN,RF,300#,ANSI B16.5 | SREE/TDC/FORGINGS/001 | SA 105 | 19.1 | 76.4 | |
| 42 | SKIRT GUSSETS | 24 | 160 x 118 Xx 8THK | SREE/TDC/STRUCTURAL/S/001 | IS 2062 E 250 GR.B | 1.0 | 24.0 | |
| 41 | WASHER | 12 | Ø 60 x 20THK. | SREE/TDC/STRUCTURAL/S/001 | IS 2062 E 250 GR.B | 0.3 | 3.6 | |
| 40 | COMPRESSION PLATE | 12 | 150 x 118 x 20THK. | SREE/TDC/STRUCTURAL/S/001 | IS 2062 E 250 GR.B | 2.8 | 33.6 | |
| 39 | SKIRT BASE RING (TO BE MADE IN SGEMENTS) | 1 | O.D 1980/I.D 1620 x 20THK.. | SREE/TDC/STRUCTURAL/S/001 | IS 2062 E 250 GR.B | 157.0 | 157.0 | |
| 38 | SKIRT SECTION-1(DEV.5567) | 1 | O.D 1780 x 8THK. x 1490 HT. | SREE/TDC/PLATES/001 | SA 516 GR.70 | 521.0 | 521.0 | |
| 37 | ----- ----- | | ----- ----- | | | ----- | ----- | |
| 36 | ----- ----- | | ----- ----- | | | ----- | ----- | |
| 35 | ----- ----- | | ----- ----- | | | ----- | ----- | |
| 34 | PR. GAUGE-PG | 1 | 6"DIALx300#xWITH FLG.ENDS | SREE/TDC/INSTRUMENTS/001 | SA 105 | ----- | ----- | |
| 33 | PR. TRANSMITTER-PT | 1 | 25NBx300#xWITH FLG.ENDS | SREE/TDC/INSTRUMENTS/001 | SA 105 | ----- | ----- | |
| 32 | P.R.RELIEF VALVE-PRV2 | 1 | 25NBx300#xWITH FLG.ENDS | SREE/TDC/INSTRUMENTS/001 | SA 105 | ----- | ----- | |
| 31 | RIVETS FOR NAME PLATE | 4 | Ø4 x 10 lg. | ----- | SS | ----- | ----- | |
| 30 | NAME PLATE | 1 | 160 x 160 x 2 THK. | ----- | SS 304 | 0.4 | 0.4 | |
| 29 | NAME PLATE BRACKET | 1 | 275 x 190 x 6 THK. | SREE/TDC/PLATES/001 | SA 516 GR.70 | 2.55 | 2.55 | |
| 28 | LIFTING LUG | 2 | 120 x 180 x 28 THK.(APD) | SREE/TDC/PLATES/001 | SA 516 GR.70 | 4.74 | 9.48 | |
| 27 | PAD FOR LIFTING LUG | 2 | 300 x 128 x 28 THK. | SREE/TDC/PLATES/001 | SA 516 GR.70 | 8.24 | 16.48 | |
| 26 | NOT USED. | | | | | | | |
| 25 | NOT USED | | | | | | | |
| 24 | NOT USED | | | | | | | |
| 23 | STUDS/2NUTS - PRV1, WFP, PT, PG & PRV2 | 40 SETS | 5/8" x 80 LG. | SREE/TDC/FASTENERS/001 | SA 193 GR.B7/ SA 194 GR.2H | 0.18 | 7.47 | |
| 22 | GASKET - PRV1, WFP, PT, PG, PRV2 | 10 | SPIRAL WOUND 25NB,300#.-4THK. | SREE/TDC/GASKETS/001 | SS 304 WITH GRAPHITE FILLED | - | - | |
| 21 | W.N FLG. FOR VALVE - PRV1,WFP | 2 | 150NB,RF,300#,ANSI B16,5 | SREE/TDC/FORGINGS/001 | SA 105 | 3,04 | 3,04 | |
| 20 | DOUBLE BLOCK & BLEED VALVE - PRV2 & PG | 2 | 25NB,300#x FLG.ENDS | SREE/TDC/INSTRUMENTS/001 | SA 105 | --- | --- | |
| 19 | BALL VALVE -PT,WFP&PRV1 | 3 | 25NB,300#x FULL BORE FLG.ENDS | SREE/TDC/INSTRUMENTS/001 | SA 105 | --- | --- | |
| 18 | LWN FLANGE FOR NOZL.-PT,WFP,PG,PRV1-2 | 5 | 25NB,LWN,RF,300#, ASME B16,5 | SREE/TDC/FORGINGS/001 | SA 105 | 4,76 | 23,8 | |
| 17 | FLANGE FOR NOZL..O | 1 | 200NB,WN,RF,300#,ASME B16,5 | SREE/TDC/FORGINGS/001 | SA 105 | 29,9 | 29,9 | |
| 16 | PIPE FOR NOZL.O | 1 | O.D 219,1x12,7TK,x166LG. | SREE/TDC/PPES/001 | SA 106 GR.B | 10,72 | 10,72 | |
| 15 | PAD FOR NOZL.O | 1 | O.D 420xI.D222,x28THK. | SREE/TDC/PLATES/001 | SA 516 GR.70 | 21,95 | 21,95 | |
| 14 | FLANGE FOR NOZ. I, D, IO | 3 | 150NB,WN,RF,300#,ASME B16,5 | SREE/TDC/FORGINGS/001 | SA 105 | 19,1 | 57,3 | |
| 13 | PIPE FOR NOZ. I, D, IO | 3 | O.D 168,3x10,97THK,x170LG. | SREE/TDC/PPES/001 | SA 106 GR.B | 2,4 | 7,21 | |
| 12 | PAD FOR NOZ. I, D, IO | 3 | O.D 320xI.D171x28THK. | SREE/TDC/PLATES/001 | SA 516 GR.70 | 12,62 | 37,86 | |
| 11 | EARTHING LUG | | ––––DELETED–– | | | | | |
| 10 | SLIDING BASE PLATE | | ––––DELETED–– | | | | | |
| 9 | FIXED BASE PLATE | | ––––DELETED–– | | | | | |
| 8 | WEB PLATE | | ––––DELETED–– | | | | | |
| 7 | RIBS | | ––––DELETED–– | | | | | |
| 6 | RIBS | | ––––DELETED–– | | | | | |
| 5 | RIBS | | ––––DELETED–– | | | | | |
| 4 | WEAR PLATE | 2 | 18 THK. X 475 X 2162 LG | SREE/TDC/PLATES/001 | SA 516 GR.70 | 145,1 | 290,2 | |
| 3 | TOP DISHED END | 1 | O.D 1800x 32THK, x S.F 50 | SREE/TDC/PLATES/001 | SA 516 GR.70 | 969,0 | 969,0 | |
| 2 | BOT. DISHED END | 1 | O.D 1800x 32THK, x S.F 50 | SREE/TDC/PLATES/001 | SA 516 GR.70 | 969,0 | 969,0 | |
| 1C | SHELL SEC.3 (DEV.5567) | 1 | O.D 1800x 2500 x 28 THK. | SREE/TDC/PLATES/001 | SA 516 GR.70 | 3059,6 | 3059,0 | |
| 1B | SHELL SEC.2 (DEV.5567) | 1 | O.D 1800x 800 x 28 THK. | SREE/TDC/PLATES/001 | SA 516 GR.70 | 978,9 | 978,9 | |
| 1A | SHELL SEC.1 (DEV.5567) | 1 | O.D 1800x 2500 x 28 THK | SREE/TDC/PLATES/001 | SA 516 GR.70 | 3059,0 | 3059,0 | |

## DRAWING INDEX

| SL. NO. | DRAWING NO. | DESCRIPTION | REMARKS |
|---|---|---|---|
| 01 | SREE/RVR/MEC/0201A | GEN.ASSLY. OF PRESSURE VESSEL (AIR) | |

## TABLE OF NOZZLES AND FLANGES

| NOZZLE MARK | QTY. | SERVICE | N.P.S | O.D. | SCH. THK. | CLASS | TYPE | FACE | PAD OD x T | PROJECTION REF. NOTE– | REMARKS |
|---|---|---|---|---|---|---|---|---|---|---|---|
| AO | 1 | ACCESS OPENING | –– | I.D.450 | 10 THK | – | – | | 920 x 10 | A.P.D. | |
| SK1–3 | 3 | SKIRT VENT | 100 (4") | 114.3 | 6.02 | – | – | – | –– | A.P.D. | |
| V | 1 | DELETED. | | | | | | | | | |
| PRV2 | 1 | PRESSURE RELIEF VALVE | 25 (1") | –– | ––– | 300# | L.W.N. | R.F | –– | 1100 | WITH BLOCK& BLEED VALVE |
| PG | 1 | PRESSURE GAUGE | 25 (1") | –– | ––– | 300# | L.W.N. | R.F | –– | 1100 | WITH BLOCK& BLEED VALVE |
| WFP | 1 | WATER FILLING POINT | 25 (1") | –– | ––– | 300# | L.W.N. | R.F | –– | 1100 | WITH BALL VALVE |
| PT | 1 | PRESSURE TRANSMITTER | 25 (1") | –– | –– | 300# | L.W.N. | R.F | ––– | 1100 | WITH BALL VALVE |
| PRV1 | 1 | PRESSURE RELIEF VALVE | 25 (1") | –– | –– | 300# | L.W.N. | R.F | –– | 1100 | WITH BALL VALVE |
| D | 1 | DRAIN | 150 (6") | 168.3 | 80 10.97 | 300# | W.N. | R.F | 320 x 28 | A.P.D. | |
| O | 1 | AIR OUTLET | 200 (8") | 219.1 | 80 12.7 | 300# | W.N. | R.F | 420 x 28 | 635 | |
| I | 1 | AIR INLET | 150 (6") | 168.3 | 80 10.97 | 300# | W.N. | R.F | 320 x 28 | 635 | |
| IO | 1 | INSPECTION OPENING | 150 (6") | 168.3 | 80 10.97 | 300# | W.N. | R.F | 320 x 28 | A.P.D. | |

NOZZLES — FLANGES

| Rev. No | Date | Description | Prepared | Checked | Approved |
|---|---|---|---|---|---|
| 4 | 13.02.2020 | NEW PART NO.58 GIVEN FOR EARTHING PL. AND AND MATL.SPECN. IS2062 E250 GR.BR REVISED TO IS2062 E250 GR.B, SHELL OVERALL HT. REVISED | V.S.N | NVBR | NVBR |
| 3 | 02.02.2020 | REVISIONS ARE MADE AS MARKED IN LINE WITH CUSTOMER COMMENTS. BILL OF MATERIAL IS UPDATED. | V.S.N | NVBR | NVBR |

PROJECTION ISO 128

| DGN | DATE | SIGN |
|---|---|---|
| DRAWN | 29.01.20 | V.S.N. |
| CHECKED | 30.01.20 | N.V.B.R. |
| APPROVED | 30.01.20 | N.V.B.R. |

SHEET SIZE: A1 — SCALE:- N.T.S. 1:1 — 2020

# IIT - MADRAS

MANUFACTURER:

SREE RAMAKRISHNA ENGG. ENTERPRISES (A DIVISION OF RVR PROJECTS PVT. LTD.)

TITLE:

## GENERAL ASSEMBLY OF PRESSURE VESSEL(AIR) WITH SKIRT

WORK ORDER NO. : 02 01

| DATE | SIZE | DRAWING NO. | SHEET | REV.NO |
|---|---|---|---|---|
| 26-01-2020 | A1 | SREE/RVR/MEC/0201A | 1 | C |

SHEET 1 OF 2